THERMIC STATION for floor-heating
with flow-meters in run and
motorized actuators in return

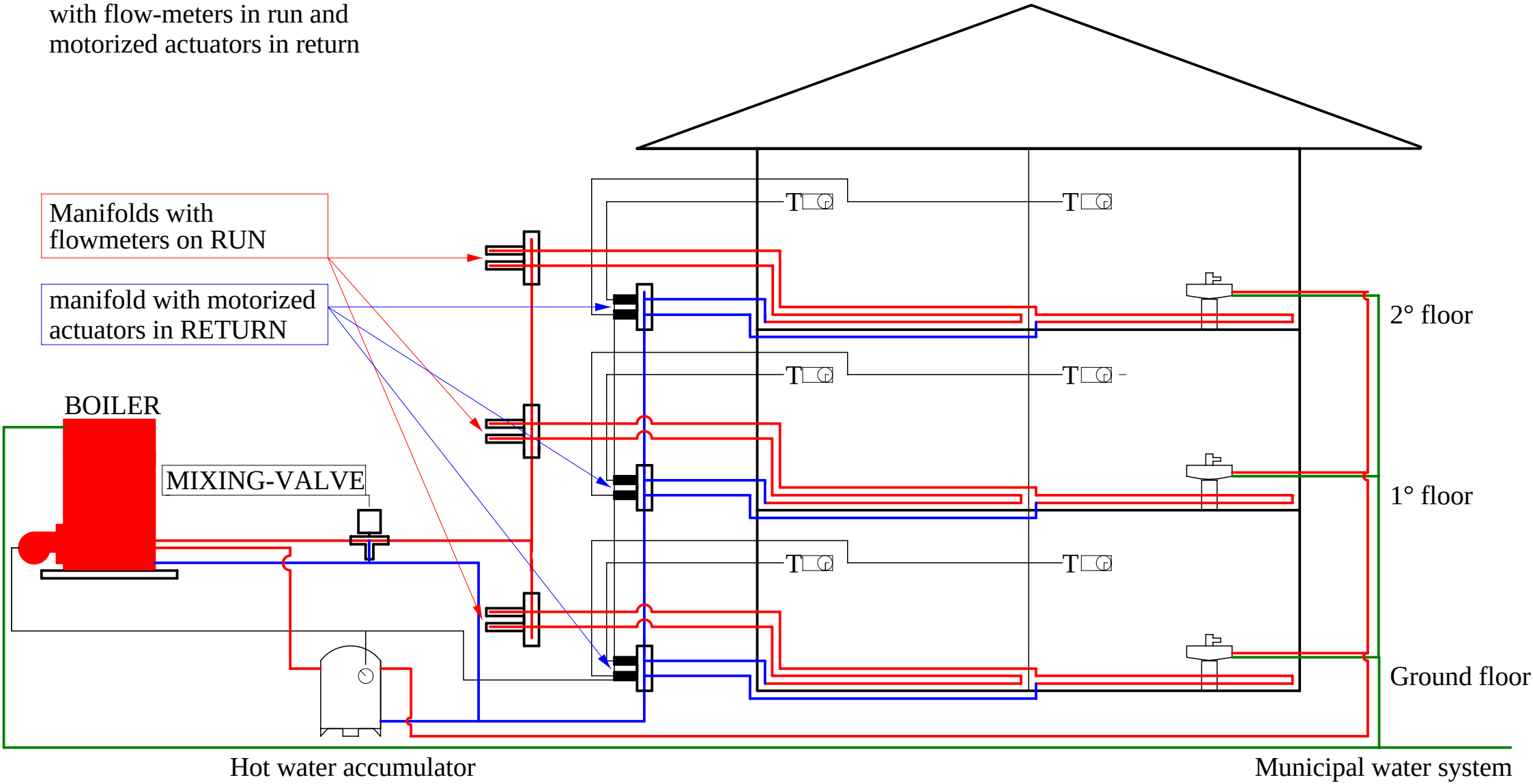

Toma Floriano & C snc